Advanced Cyclone Systems

EMISSION CONTROL

CASE STUDY

NTE Process | Konin, Poland | 2021

Hurricane HR System
for powder capture after a lithium hydroxide spray dryer (51 000m³/h at140°C)



FOREWORD

ACS designed and supplied a Hurricane Cyclone System to maximize lithium hydroxide recovery from an Okawara spray dryer for **NTE Process** in Konin, Poland.

NTE Process is a single source provider of turnkey industrial plants, Industry 4.0 solutions, and process technologies for various sectors.

The final is client is **Johnson Matthey**, a global leader in sustainable technologies and specialty chemicals for over 200 years.

JM is a multinational company with operations in over 30 countries and more than 15,000 employees worldwide. In the financial year 2020/21, it generated a revenue of £15.7 billion.

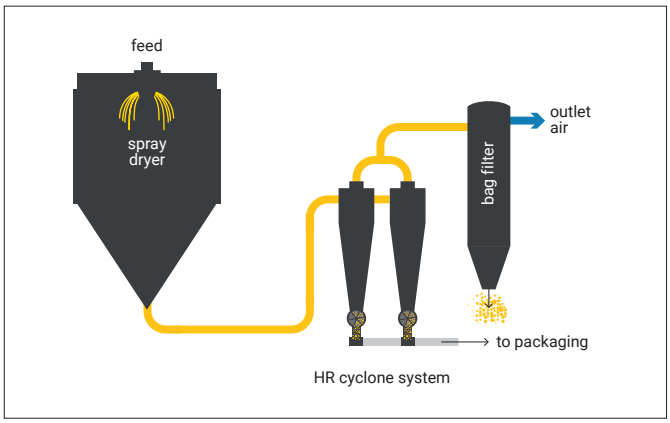

Fig. 1 – Process diagram

IDENTIFYING THE PROBLEM AND SOLUTION

Johnson Matthey had a challenging objective: to collect as much powder as possible from their spray drying process of lithium hydroxide, a valuable product used in batteries and other applications. The target was to achieve a collection efficiency of more than 98%, meaning that only less than 2% of the spray dried powder would escape to the bag house located downstream of the cyclone. To accomplish this goal, they needed a reliable and efficient cyclone design that could handle the operating conditions of their process.Johnson Matthey provided all the relevant information about their operating conditions to ACS. The information included the particle size distribution (PSD) of the feed and the final product, which were tested in a pilot unit to ensure the quality and consistency of the powder. The air flow rate was 51 000 cubic meters per hour, and the temperature was 140 degrees Celsius. The load into the cyclone, or the mass flow rate of the powder, was 2200 kilograms per hour.The cyclones were made of stainless steel SS316L, a material that offers the appropriate strength and corrosion resistance. The inside of the cyclones was fully lined with alumina tiling, a ceramic material that provides abrasion and wear durability. The cyclones were also insulated on site with 50 millimeters of rockwool, a mineral wool that reduces heat loss and noise.

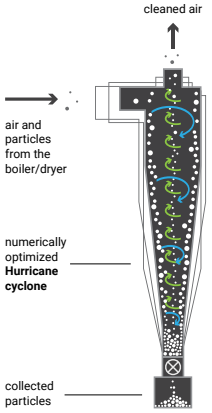

Fig. 2 – Hurricane cyclone

ABOUT HURRICANE CYCLONES

Hurricane cyclones are patented numerically optimized cyclones. **Hurricane** geometries maximize powder collection for each different application, while minimizing reentrainment and keeping pressure drop at reasonable levels. Hurricane cyclones demonstrate impressive efficiency in capturing very fine powders with a Volume Median Diameter (VMD) of less than 5µm.

These cyclones are the output of nonconvex nonlinear problems formulated and solved after years of work in partnership with the Faculty of Engineering of Porto and incorporate the most recent findings on the impact of agglomeration in the cyclone collection efficiency (Chemical Engineering Journal 162 (2010) 861–876).

A single Hurricane is more efficient than any other known cyclone available in the market for the same pressure drop.

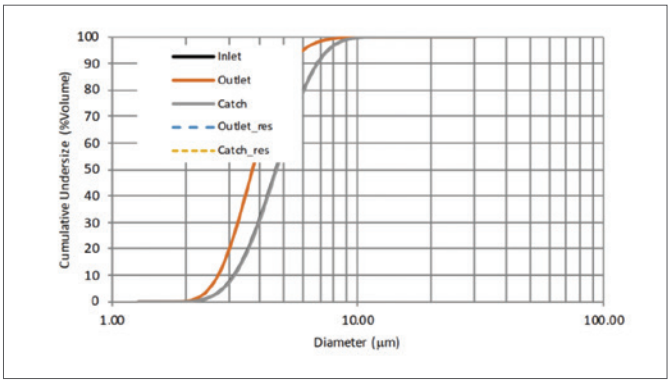

Fig. 3 - Particle size distribution used in simulations

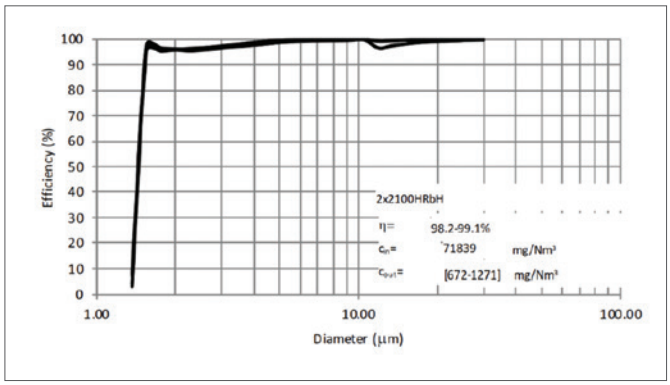

Fig. 4 – Predicted maximum and minimum grade efficiency curves with corresponding global efficiency values

DESIGN BASIS

- Powder **[Lithium Hydroxide]**
- Particle size distribution **[Fig. 3]**
- Temperature (°C) **[140]**
- Actual flow rate (m^3/h) **[51 000]**
- Inlet concentration (mg/Nm^3_{dry}) **[71 839]**
- Site location **[Indoors]**

SYSTEM SPECIFICATIONS | EMISSIONS

- Predicted efficiency with new Hurricane cyclone (%) **[98.2 - 99.1]**
- Expected emissions (mg/Nm^3) **[672 - 1271]**
- Powder recovery rate (Kg/h) **[7.4]**
- Expected total pressure drop (kPa) **[2.1]**

GENERAL ARRANGEMENT

The system is composed by 2 Hurricane cyclones ø2100mm installed in parallel, each one with a hopper above the air lock. All equipment was manufactured in stainless steel AISI 316L with alumina ceramic tiling for abrasion protection and rockwool insulation.

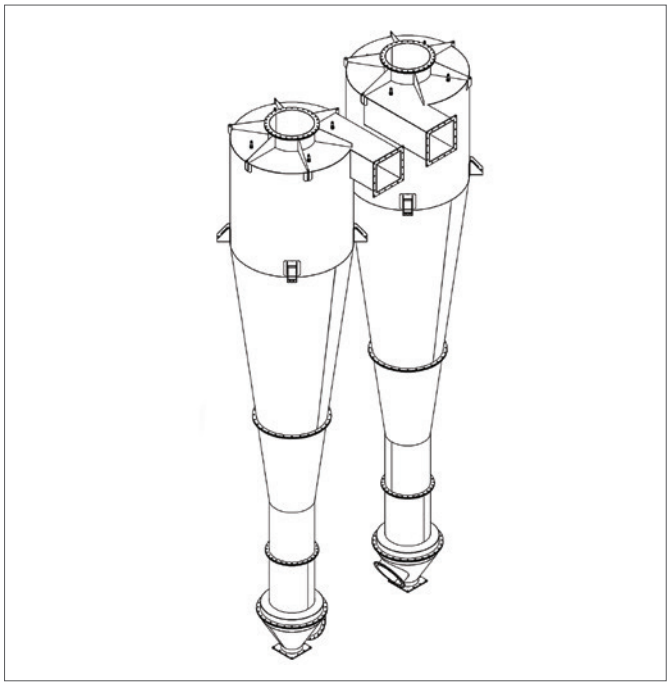

Fig. 5 – ACS solution [2 HR ø2100]